MIXPAC™ DM2X 400

400 ML CARTRIDGE DISPENSER

Ratio selector switch
For maximizing mix quality between 1:1 or 2:1/4:1/10:1 ratios

Cast aluminum frame
For extended durability and stability

Dual drive system
To ensure precise metering



Cartridge release button
For convenient cartridge ejection

Brake release
Easily accessible with one hand

FEATURES

- Universal conversion kits with interchangeable cartridge trays and plungers
- High thrust ratio
- Ergonomically designed

BENEFITS

- Quick ratio exchange and use with DM2X and DP2X tools
- Easy to dispense high viscosity products
- Maximum comfort and fatigue-free operation

APPLICATIONS



PRODUCT BY RANGE



DM2X 200 **DM2X 400**

THE DM2X 400 IS A MANUAL DISPENSER FOR ACCURATE METERING WITH PRECISE AND CONSISTENT RESULTS.

SPECIFICATIONS

- Weight: 1.93 kg / 4.24 lbs
- Length: 366mm / 14.4 in
- Maximum thrust: 6.0 kN
- Thrust ratio: 35:1
- Tool material: cast aluminum
- Cartridge capacity: 400 mL
- Cartridge ratio: 1:1/2:1/4:1/10:1

DIMENSIONS

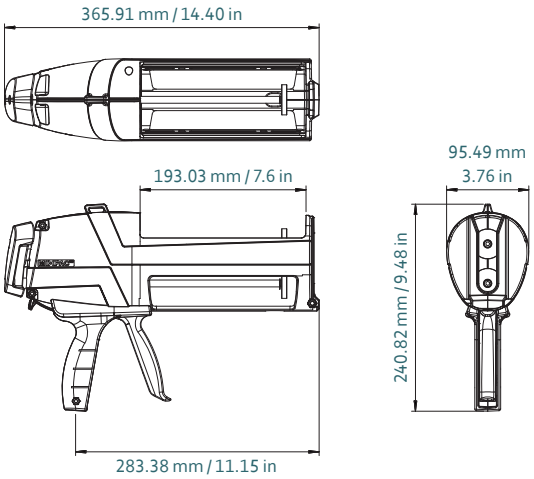

Part number	Article number	Ratio 1:1	2:1	4:1	10:1	Packaging
DM2X 400-01-60-01	165807	✓	✓			Packed individually 1 unit per master carton
DM2X 400-04-60-01	165808			✓		
DM2X 400-10-60-01	165809				✓	

MATCHING MIXPAC™ SIDE-BY-SIDE CARTRIDGES

C-SYSTEM / F-SYSTEM



C-System / F-System
400 mL / 1:1 PP/PA/PBT



C-System / F-System
400 mL / 2:1 PP/PA



C-System / F-System
400 mL / 4:1 PP/PBT



C-System / F-System
400 mL / 10:1 PP/PBT

CONVERSION KITS

CKX 400-01-01, CKX 400-04-01, CKX 400-10-01

MATCHING ACCESSORIES

All accessories are displayed on page 16.

MIXPAC™ ACCESSORIES AND SPARE PARTS

	Name/Description	ID	Article number	Compatible with
	**Plunger** for DS Dispensers	103160 113018 100385 113559 115587	PLS 053-01 PLS 051-04 PLS 051-10 PLS 077-01 PLS 075-10	**DS**
	**Plunger** for DMA/DMB Dispensers	109018 109020 103114 109193 128083 128084	PLA 050-01 PLA 050-04 PLA 050-10 PLA 075-01 PLB 50-04 PLB 50-10	**DMA/DMB**
	**Conversion Kit 200 mL** Cartridge tray A and B plunger disks	165834 165835 165836	CKX 200-01-01 CKX 200-04-01 CKX 200-10-01	**DM2X 200** **DP2X 200**
	**Conversion Kit 400 mL** Cartridge tray A and B plunger disks	165839 165840 165841	CKX 400-01-01 CKX 400-04-01 CKX 400-10-01	**DM2X 400** **DP2X 400**